Supply and Connectivity Options for GMSplus Series Recorder

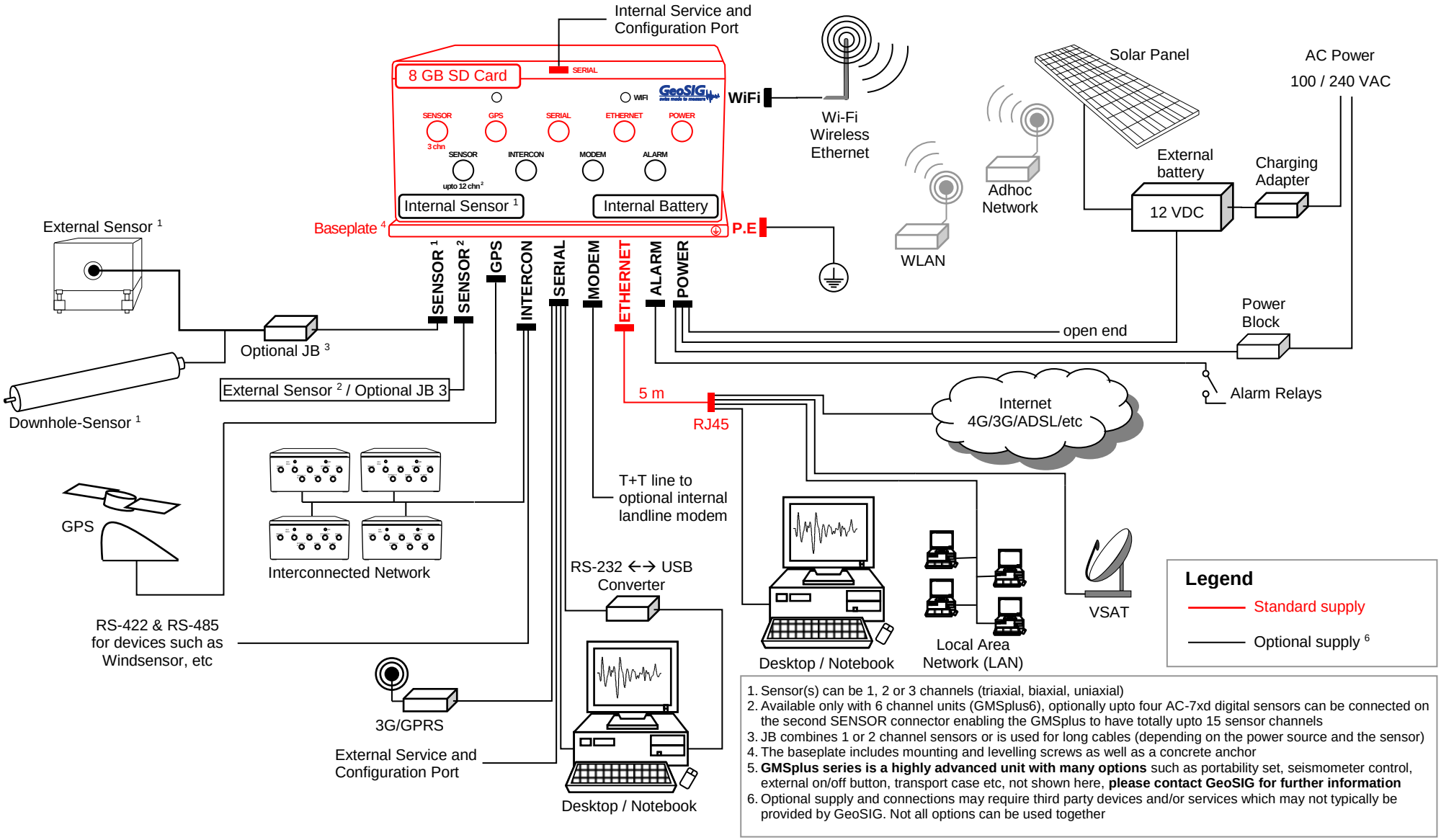

1. Sensor(s) can be 1, 2 or 3 channels (triaxial, biaxial, uniaxial)
2. Available only with 6 channel units (GMSplus6), optionally upto four AC-7xd digital sensors can be connected on the second SENSOR connector enabling the GMSplus to have totally upto 15 sensor channels
3. JB combines 1 or 2 channel sensors or is used for long cables (depending on the power source and the sensor)
4. The baseplate includes mounting and levelling screws as well as a concrete anchor
5. **GMSplus series is a highly advanced unit with many options** such as portability set, seismometer control, external on/off button, transport case etc, not shown here, **please contact GeoSIG for further information**
6. Optional supply and connections may require third party devices and/or services which may not typically be provided by GeoSIG. Not all options can be used together