Connectivity Options for GSR-xx Series Recorder

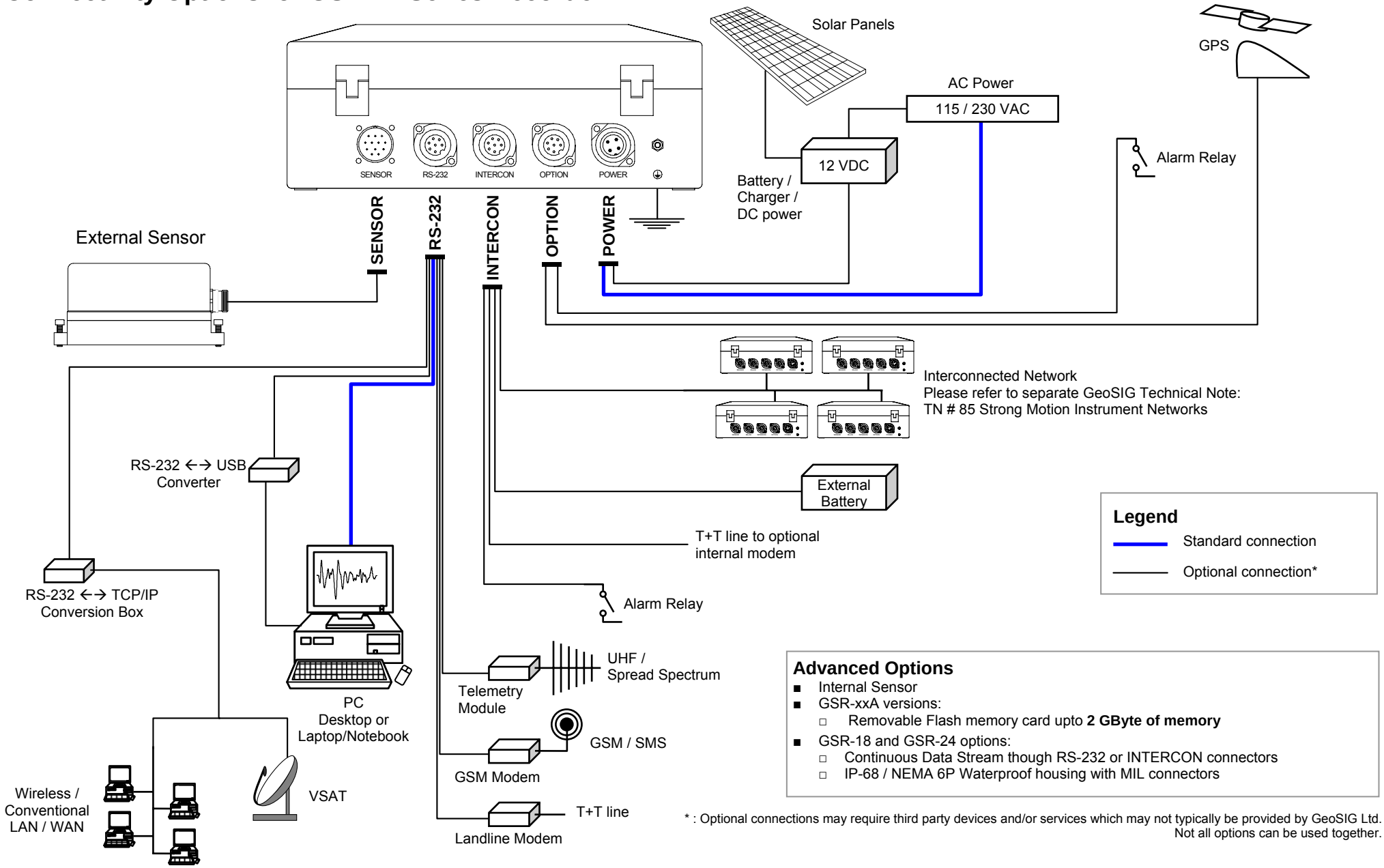

Advanced Options

- Internal Sensor
- GSR-xxA versions:
  - Removable Flash memory card upto **2 GByte of memory**
- GSR-18 and GSR-24 options:
  - Continuous Data Stream though RS-232 or INTERCON connectors
  - IP-68 / NEMA 6P Waterproof housing with MIL connectors

* : Optional connections may require third party devices and/or services which may not typically be provided by GeoSIG Ltd.
Not all options can be used together.